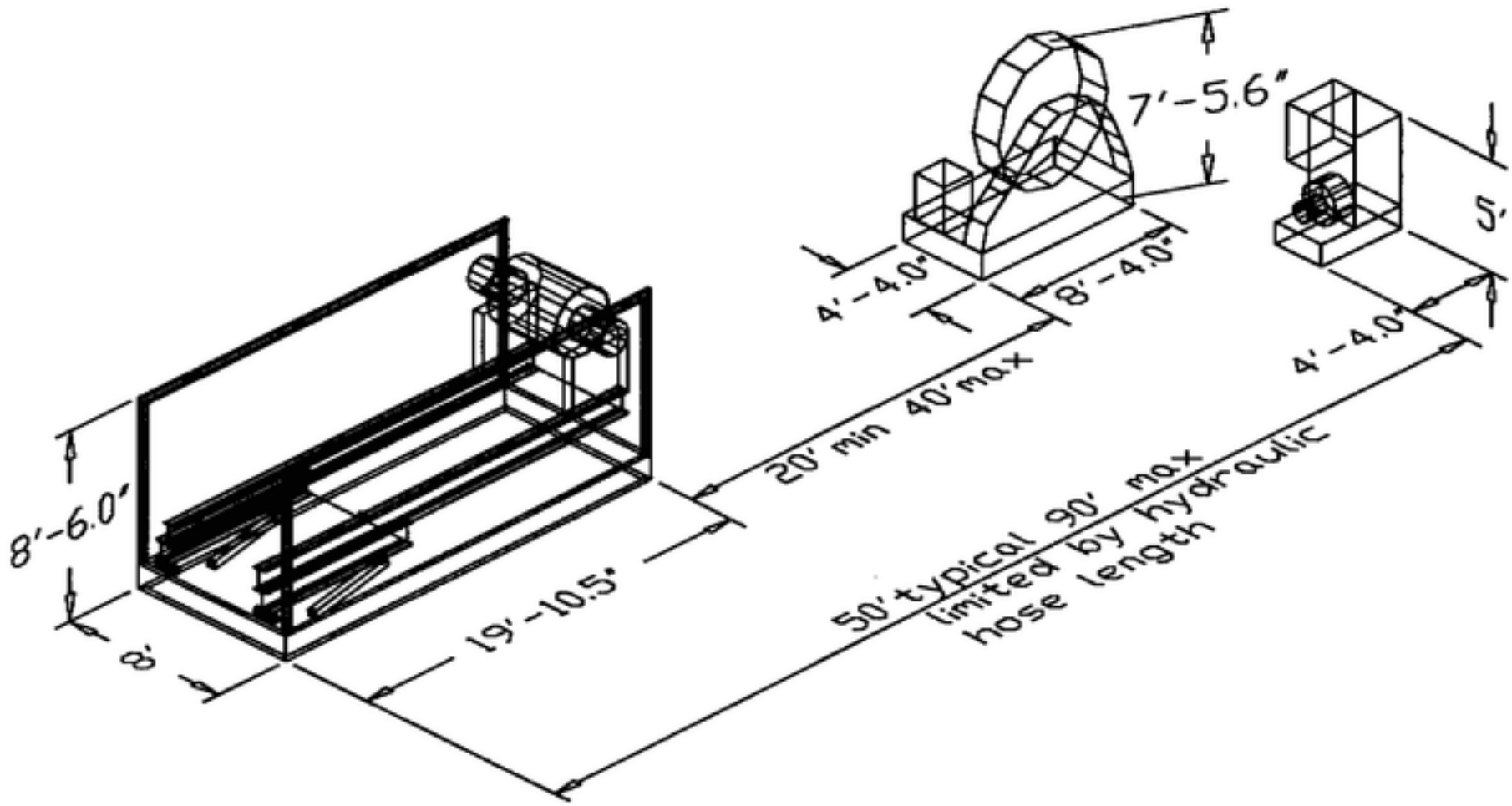

HAWAII INSTITUTE OF GEOPHYSICS 2525 CORREA RD, HONOLULU HI 96822	DESIGNED: Erickson 2-26-93	DESC: FILE: layout LRS DECK LAYOUT	DRAWING NUMBER ----------	REV –